Week 01
Term 03
2015

Learning Brief

SME4
Further Trigonometry and Further Calculus

Goals

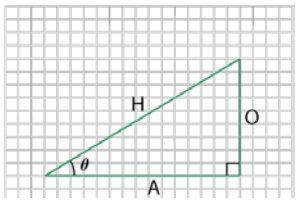

image source: http://j.mp/PLhQDn

Unit Goals:

- extend knowledge of trigonometrical relationships
- solve problems involving correct choice and successful application of trigonometric identities
- solve trigonometric equations

Further Trigonometry:

- Review basic trigonometry

Theoretical Components

References:
PDF file - Trigonometry Pages 1-10
Textbook Sections:
Math Quest 11 Methods, 6A, 6B, 6C, 6D
Maths Quest 12 Specialist Maths 2A
YouTube links: links in the pdf file.

Knowledge checklist:

- What is a ratio?
- What are the trig ratios?
- right angled trigonometric problems
- circle trigonometry
- unit circle
- exact values
- radians

Practical Components

Maths Quest 11 Methods
6A - Standard Trig Ratios
6B - Unit Circle
6C - Radians
6D - Symmetry

Maths Quest 12 Specialist Maths
2A - Reciprocal Ratios and Symmetry

A lot of the sets from the 11 Methods book in this week's brief should be revision from year 11- only complete questions if you think you need to. If you're not sure - then ask me!

Q/F/

Quiz link:
http://www.quiz-creator.com/qms/quiz.php?u616212q36279v2998718739

Investigation

A belt fits tightly around two pulleys of radii of 4 cm and 6 cm respectively which have a distance of 20 cm between their centers.

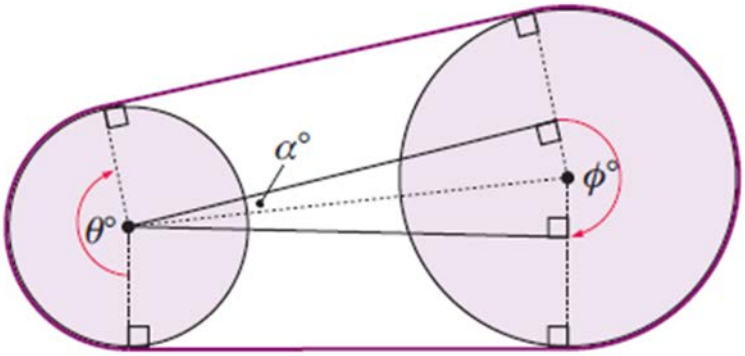

Find, correct to 4 significant figures:

a. α b. θ c. ϕ d. the length of the belt